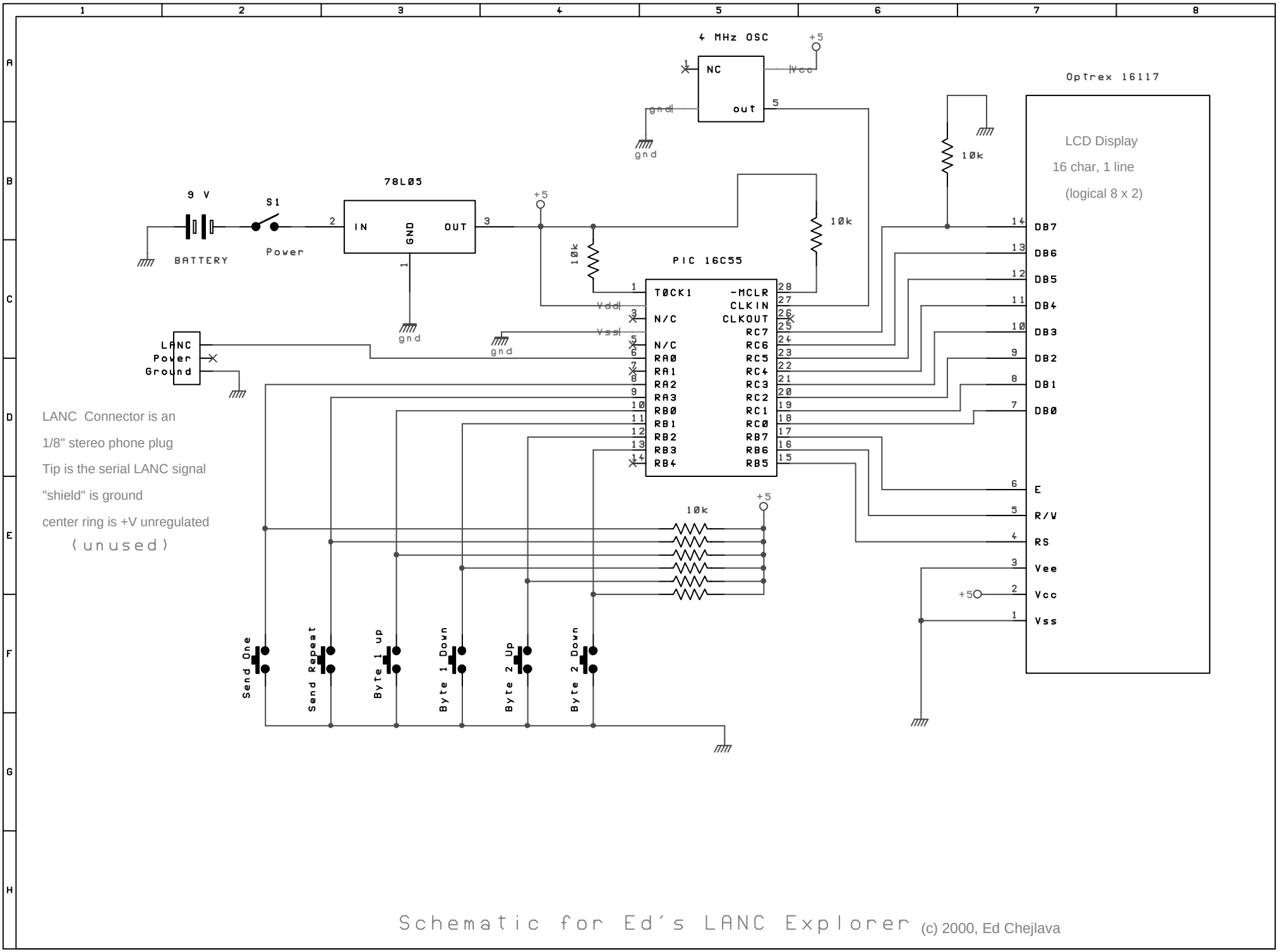

Schematic for Ed's LANC Explorer (c) 2000, Ed Chejlava